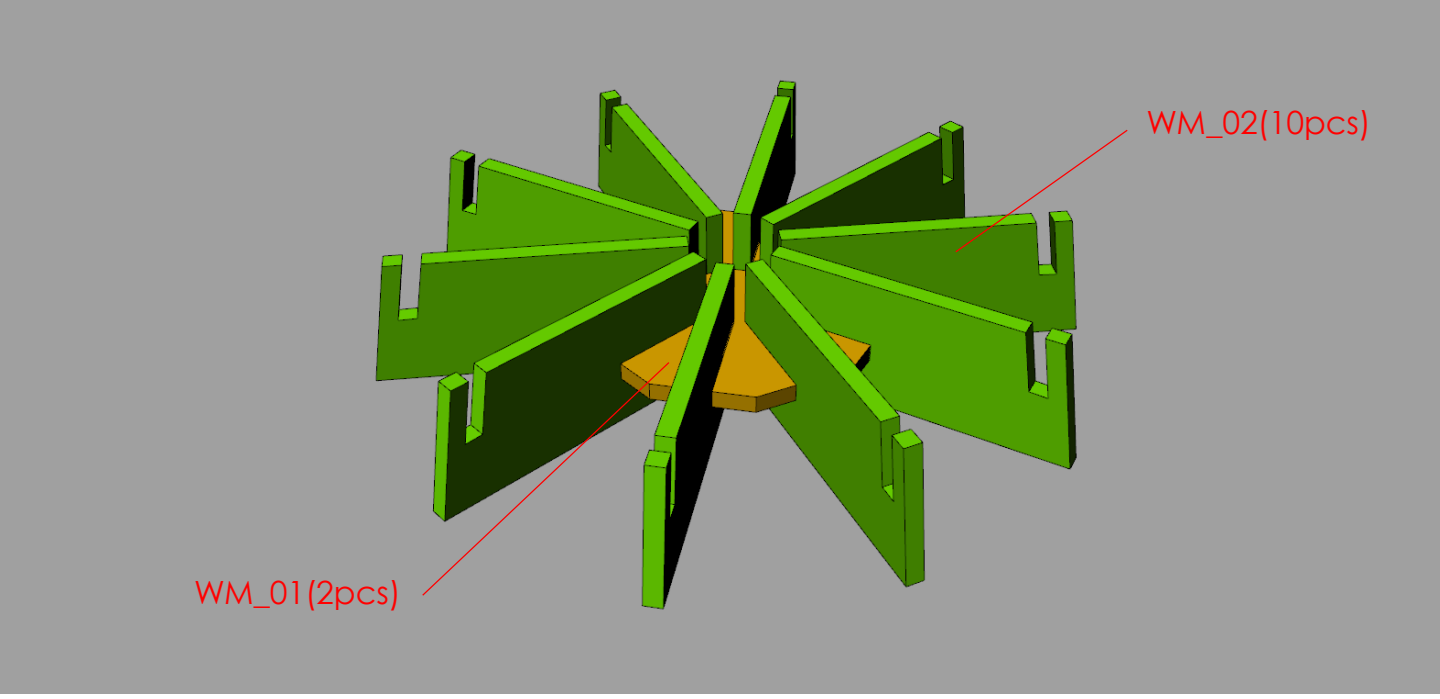
WM_02(10pcs)
WM_01(2pcs)

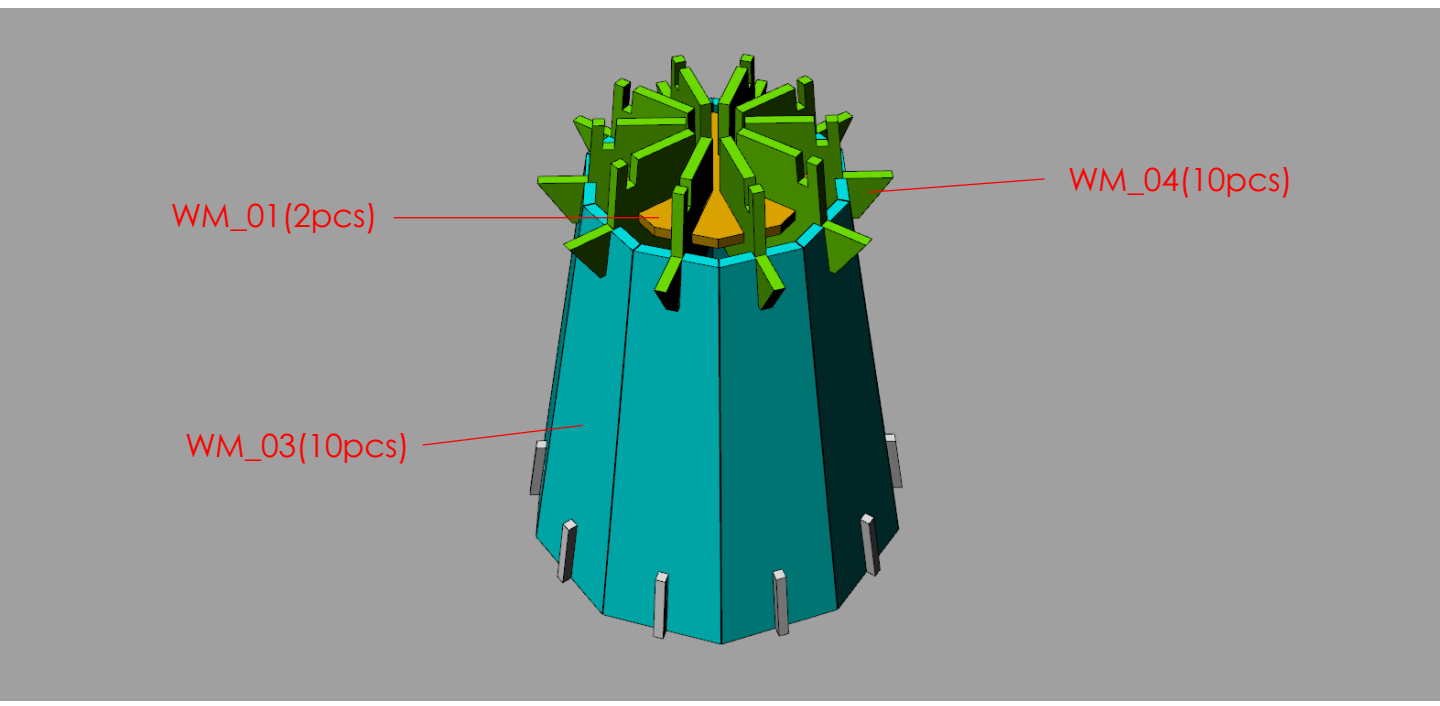
WM_01(2pcs)
WM_04(10pcs)
WM_03(10pcs)

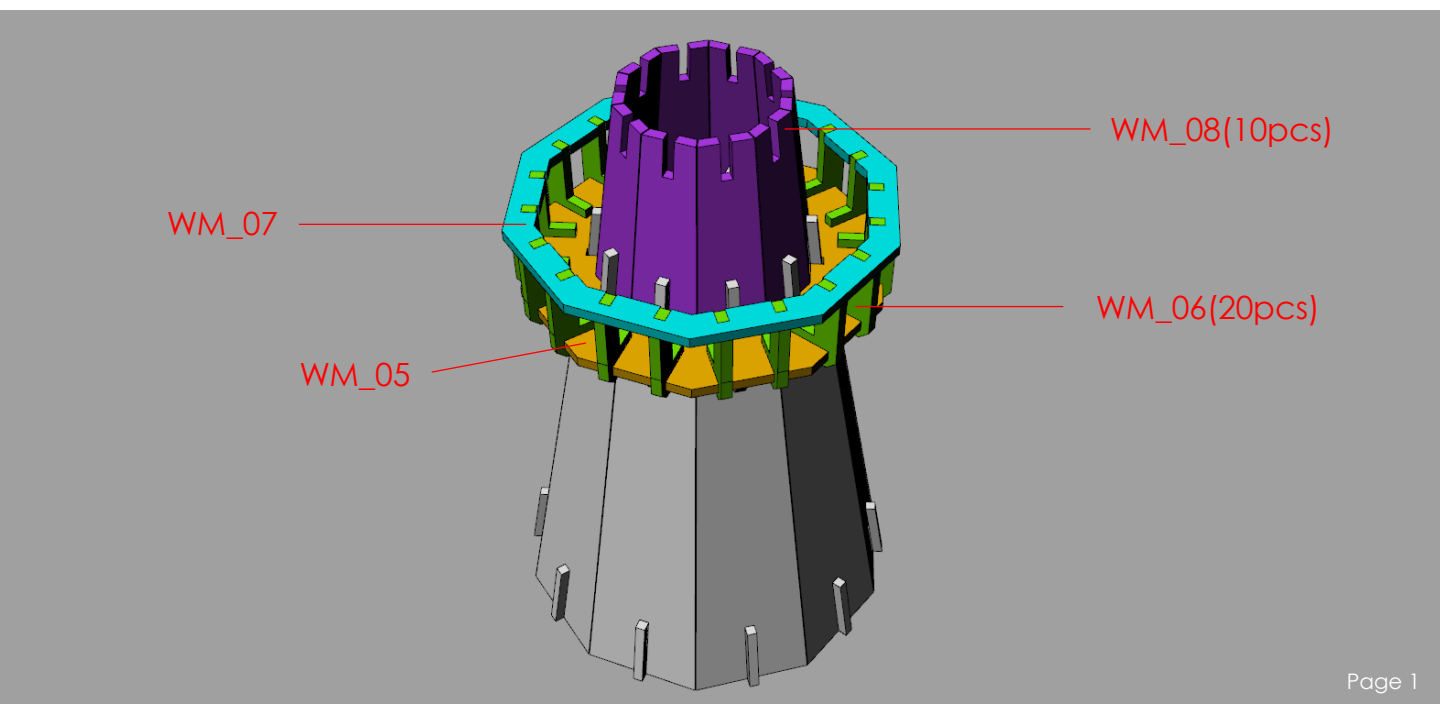
WM_08(10pcs)
WM_07
WM_06(20pcs)
WM_05

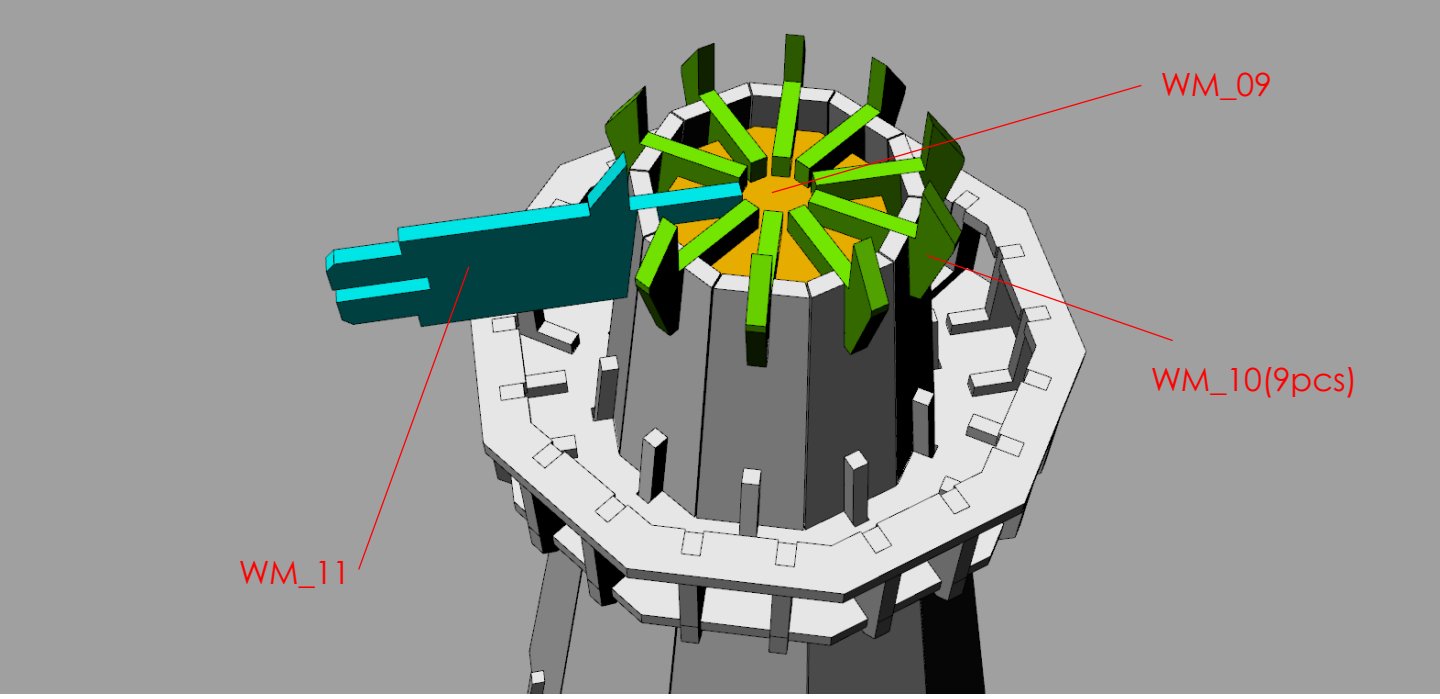
WM_09
WM_10(9pcs)
WM_11

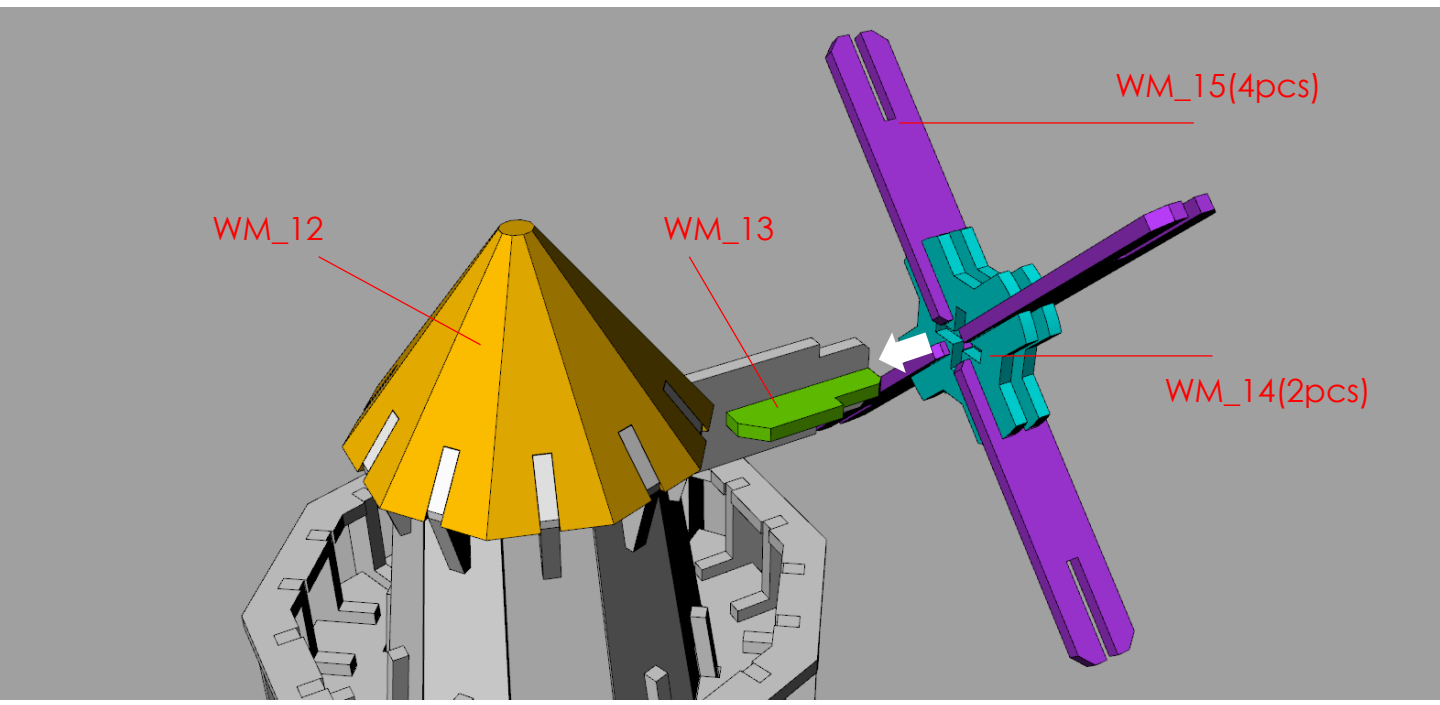
WM_15(4pcs)
WM_12
WM_13
WM_14(2pcs)

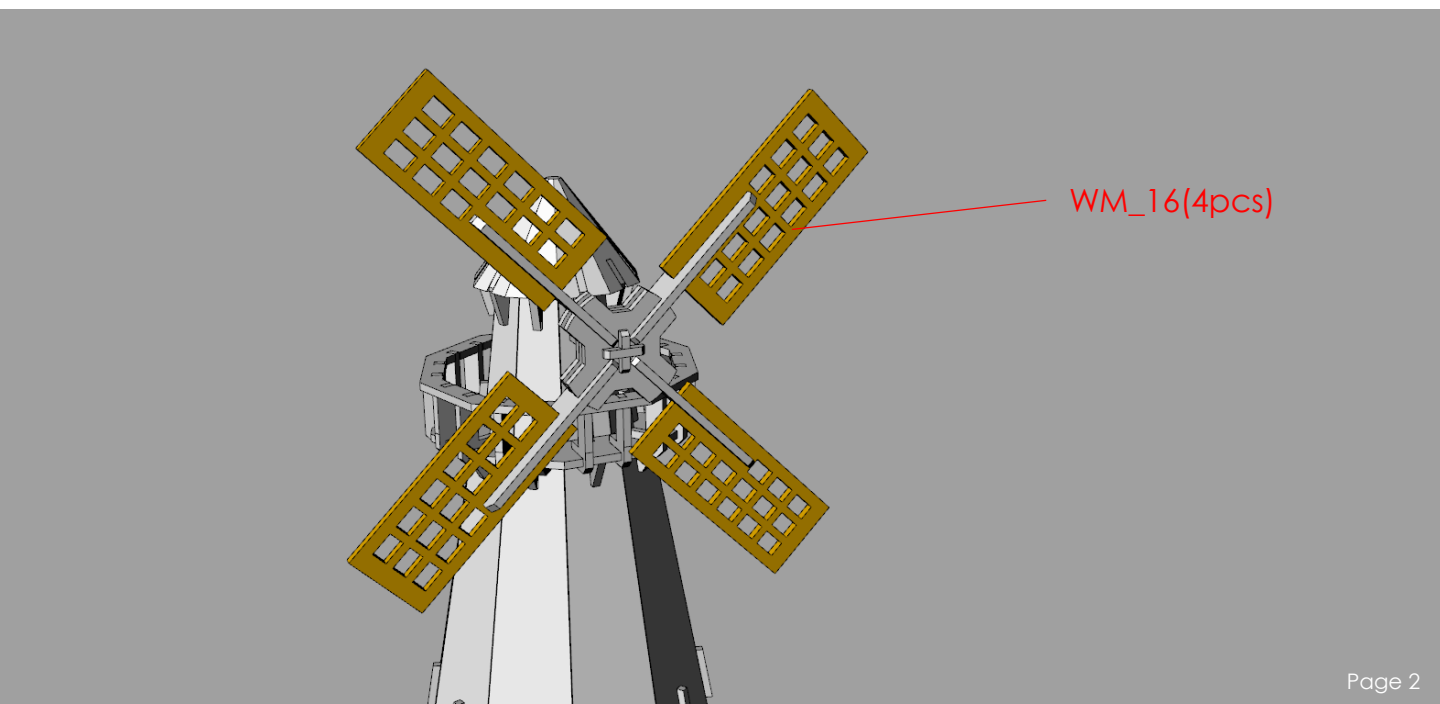
WM_16(4pcs)